ON STOCHASTIC COMPLETENESS OF JUMP PROCESSES

ALEXANDER GRIGOR'YAN, XUEPING HUANG, AND JUN MASAMUNE

Abstract. We prove the following sufficient condition for stochastic completeness of symmetric jump processes on metric measure spaces: if the volume of the metric balls grows at most exponentially with radius and if the distance function is adapted in a certain sense to the jump kernel then the process is stochastically complete. We use this theorem to prove the following criterion for stochastic completeness of a continuous time random walk on a graph with a counting measure: if the volume growth with respect to the graph distance is at most cubic then the random walk is stochastically complete, where the cubic volume growth is sharp.

Contents

1. Introduction 1
2. Perturbation of Dirichlet forms and stability of stochastic completeness 7
3. Stochastic completeness under the volume growth 11
4. Stochastic completeness of random walks on graphs 19
5. Further examples and applications 24
References 28

1. Introduction

It was R. Azencott [3] who discovered in 1974 that Brownian motion on a geodesically complete manifold can be stochastically incomplete, that is, can have finite lifetime with positive probability. The latter means that Brownian motion runs away at such a high speed that it reaches the infinity in finite time (and then ceases to exist). This behavior is difficult to imagine from the standpoint of the Euclidean geometry of $\mathbb{R}^n$ because the usual perception of Brownian motion is that it is a lazy erratic movement that hardly escapes to the infinity at all, not to say in finite time. However, the picture changes drastically already in hyperbolic geometry: Brownian motion on the hyperbolic space $\mathbb{H}^n$ escapes to ∞ at a linear rate practically along geodesic rays, although still having infinite lifetime. In the aforementioned paper Azencott has observed that on Cartan-Hadamard manifolds Brownian motion can escape to ∞ at arbitrarily high speed (in particular, can be stochastically incomplete) provided the sectional curvature grows to $-\infty$ fast enough.

We say that a manifold M is stochastically complete if so is Brownian motion on M. How to decide whether a given geodesically complete non-compact manifold M

Date: December 24, 2010.

2000 *Mathematics Subject Classification.* Primary 60J75, Secondary 60J25, 60J27, 05C81.

Key words and phrases. jump processes, random walks, stochastic completeness, non-local Dirichlet forms, physical Laplacian.

is stochastically complete or not? This question has received significant attention in both probabilistic and geometric literature. One of the first results in this direction is due to S.-T.Yau [36], who proved the stochastic completeness of M under the hypothesis that the Ricci curvature of M is bounded from below. Surprisingly enough, a simple and powerful sufficient condition for the stochastic completeness can be established in terms of the volume growth function. Let d be the geodesic distance on M and $B(x,r)$ be geodesic balls, that is,

$$B(x,r) = \{y \in M : d(x,y) \le r\}. \tag{1.1}$$

Set $V(x,r) = \mu(B(x,r))$ where μ is the Riemannian volume.

Theorem 1.1. ([8], [16], [20], [22]) *If, for some $x_0 \in M$ and some constant C,*

$$V(x_0,r) \le \exp(Cr^2) \tag{1.2}$$

for all large enough r, then M is stochastically complete.

Furthermore, it was proved in [16] that if

$$\int^{\infty} \frac{rdr}{\log V(x_0,r)} = \infty$$

then M is stochastically complete (see also [15], [17], [19]).

Why can the conditions for stochastic completeness be stated in terms of geodesic distance? Of course, both Brownian motion and the geodesic distance are defined using the Riemannian metric, so they are related. However, as one can see from the proofs, one can replace in the above theorem the geodesic distance by any other distance function (or even by an exhaustion function) d on M provided it satisfies the condition

$$|\nabla d(x,\cdot)| \le 1, \tag{1.3}$$

where ∇ is the Riemannian gradient understood in a weak sense. As it was proved in [30], [31], Theorem 1.1 remains true on arbitrary metric measure spaces with a strongly local Dirichlet form provided the metric d satisfies (1.3), where now $|\nabla\cdot|^2$ denotes the energy density of the Dirichlet form.

The purpose of the present work is twofold. We first prove a sufficient condition in terms of the volume growth for the stochastic completeness of jump processes defined via their Dirichlet forms. Then we apply the abstract theorem to investigate the stochastic completeness of nearest neighborhood random walks on graphs in terms of the volume growth relative to the graph distance.

Let (X,d) be a metric space such that all metric balls

$$B(x,r) = \{y \in X : d(x,y) \le r\}$$

are compact. In particular, (X,d) is locally compact and separable. Let μ be a Radon measure with full support on X. Let $J(x,dy)$ be a kernel that associates for any $x \in X$ a Radon measure on the Borel σ-algebra $\mathcal{B}(X \setminus \{x\})$, that depends on x in a measurable way. Assume that J satisfies in addition the following two conditions:

(a) J is symmetric with respect to measure μ in the following sense:

$$\int_X \int_{X\setminus\{x\}} f(x)g(y)J(x,dy)\mu(dx) = \int_X \int_{X\setminus\{x\}} g(x)f(y)J(x,dy)\mu(dx), \tag{1.4}$$

for all non-negative Borel functions f, g on X;

(b) there is a positive constant M such that

$$\sup_{x\in X}\int_{X\setminus\{x\}}(1\wedge d(x,y)^2)J(x,dy)\le M. \tag{1.5}$$

For example, such a kernel can be defined by $J(x,dy) = j(x,y)\,d\mu(y)$ where $j(x,y)$ is a non-negative Borel function on $X\times X\setminus \mathrm{diag}$ that is symmetric in x,y and satisfies (1.5).

Consider the following bilinear functional

$$\mathcal{E}(f,g)=\frac{1}{2}\int_X\int_{X\setminus\{x\}}(f(x)-f(y))(g(x)-g(y))J(x,dy)\mu(dx) \tag{1.6}$$

that is defined on Borel functions f and g whenever the integral makes sense. The condition (1.5) implies that $\mathcal{E}(f,g)$ is finite on all Lipschitz functions on X with compact support. Taking an appropriate closure of this domain, one obtains a natural domain $\mathcal{F}\subset L^2(X,\mu)$ of $\mathcal{E}$ where the form $\mathcal{E}$ is closed. In fact, $(\mathcal{E},\mathcal{F})$ is a regular Dirichlet form (cf. [12, Example 1.2.4]).

By [12], any regular Dirichlet form determines a Hunt process $\{\mathcal{X}_t\}_{t\ge 0}$ on X, and for the Dirichlet form (1.6) this process is a jump process with the jump kernel $J(x,dy)$. We are interested in conditions ensuring the stochastic completeness of $\mathcal{X}_t$, that is, the infinite life time of the process.

Many examples of jump processes are provided by Lévy-Khintchine theorem where the Lévy measure corresponds to $J(x,dy)$. The condition (1.5) appears also in Lévy-Khintchine theorem (see [4, 29]). For construction of the Hunt process (1.5) can be replaced by a weaker condition of [12, Example 1.2.4]. However, for the purpose of investigation of stochastic completeness the condition (1.5) plays the same role as (1.3) does for diffusion.

Definition 1.2. *We say that a distance function d is* adapted *to a kernel $J(x,dy)$ (or J is adapted to d) if (1.5) is satisfied.*

For example, the Euclidean distance in $\mathbb{R}^n$ is adapted to any Lévy measure. An explicit example of a Levy measure in $\mathbb{R}^n$ is

$$J(x,dy)=\frac{c_{n,\alpha}}{|x-y|^{n+\alpha}}m(dy),$$

where $\alpha\in(0,2)$ and m is the Lebesgue measure. The corresponding Levy process (=the Hunt process of $(\mathcal{E},\mathcal{F})$) is the symmetric α-stable process with the generator $\Delta^{\alpha/2}$, where Δ is the (positive definite) Laplace operator in $\mathbb{R}^n$.

To state our first main result, define closed metric balls $B(x,r)$ in X by (1.1) where d now is the given metric in X, and set $V(x,r)=\mu(B(x,r))$.

Theorem 1.3. *Assume that J satisfies (1.4) and (1.5). Assume also that, for some $x_0\in X$ and $b>0$,*

$$\liminf_{r\to\infty}\frac{\log V(x_0,r)}{r\log r}<\frac{1}{2}. \tag{1.7}$$

Then the Dirichlet form $(\mathcal{E},\mathcal{F})$ is stochastically complete.

For example, (1.7) is satisfied if there is a sequence of values of r that goes to ∞ and a constant $b > 0$ such that

$$V(x_0, r) \le \exp(br), \tag{1.8}$$

or if, for some $c \in \left(0, \frac{1}{2}\right)$,

$$V(x_0, r) \le \exp(cr \log r).$$

We do not claim that the value $\frac{1}{2}$ in (1.7) is sharp.

In the proof we split the jump kernel $J(x, dy)$ into the sum of two parts:

$$J'(x, dy) = J(x, dy)\mathbf{1}_{\{d(x,y)\le 1\}} \text{ and } J''(x, dy) = J(x, dy)\mathbf{1}_{\{d(x,y)>1\}} \tag{1.9}$$

and show first the stochastic completeness of the Dirichlet form $(\mathcal{E}', \mathcal{F}')$ associated with J'. For that we adapt the method of B.Davies used in [8] for the proof of Theorem 1.1. The bounded range of J' allows to treat the Dirichlet form $(\mathcal{E}', \mathcal{F}')$ as almost local. The condition (1.5) plays in the proof the same role as the condition (1.3) in the local case. However, the lack of locality brings up in the estimates various additional terms that have to be compensated by a stronger hypothesis of the volume growth (1.7), instead of the quadratic exponential growth (1.2) in Theorem 1.1. The tail J'' can regarded as a small perturbation as we show that $(\mathcal{E}, \mathcal{F})$ is stochastically complete if and only if $(\mathcal{E}', \mathcal{F}')$ is so.

It is not clear if the discrepancy between the powers of r in (1.2) and (1.8) is essential or technical. We are inclined to think that the condition (1.7) in Theorem 1.3 is close to optimal but we still lack counterexamples.

In a similar setting Masamune and Uemura [26] proved the stochastic completeness under a stronger hypothesis than (1.7): for any $\varepsilon > 0$

$$e^{-\varepsilon d(x_0,x)} \in L^1(X, \mu),$$

that in particular implies $V(x_0, r) = \exp(o(r))$ as $r \to \infty$. As we will see below, it is critical for some applications to allow a large constant b in (1.8).

Let us now turn to random walks on graphs. Let (X, E) be a locally finite, infinite, connected graph, where X is the set of vertices and E is the set of edges. We assume that the graph is undirected. Let μ be the counting measure on X. Define the jump kernel by $J(x, dy) = 1_{\{x\sim y\}} d\mu(y)$, where $x \sim y$ means that x, y are neighbors, that is, $(x, y) \in E$. This kernel determines a continuous time random walk on X with the generator

$$\Delta f(x) = \sum_{y\sim x} (f(x) - f(y)).$$

The operator Δ is called *unnormalized* or *physical* Laplace operator on (X, E), to distinguish from the *normalized* or *combinatorial* Laplace operator

$$\hat{\Delta} f(x) = \frac{1}{\deg(x)} \sum_{y\sim x} (f(x) - f(y)),$$

where $\deg(x)$ is the number of neighbors of x. The normalized Laplacian $\hat{\Delta}$ corresponds to the same jump kernel but when μ is the degree measure, that is, $\mu(x) = \deg(x)$. It is easy to prove that $\hat{\Delta}$ is a bounded operator in $L^2(X, \deg)$, which then implies that the associated random walk is always stochastically complete (see [9]).

On the contrary, the random walk associated with the unnormalized Laplace operator can be stochastically incomplete. Wojciechowski [34, 35] and Weber [33] first independently studied the stochastic incompleteness of the random walk using different approaches. Their results are extended to a more general framework by Keller and Lenz [23]. See also [24, 21] for further results.

We say that the graph (X, E) is stochastically complete if the continuous time random walk on X with generator Δ is stochastically complete.

Denote by $\rho(x, y)$ the graph distance on X, that is the minimal number of edges in an edge chain connecting x and y. Let $B_\rho(x, r)$ be closed metric balls with respect to this distance ρ and let $V_\rho(x, r) = |B_\rho(x, r)|$ where and $|\cdot| := \mu(\cdot)$ denotes the number of vertices in the given set.

Our second main result is the following theorem.

Theorem 1.4. *If there is a point $x_0 \in X$ and a constant $c > 0$ such that*

$$V_\rho(x_0, r) \leq cr^3 \tag{1.10}$$

for all large enough r, then the graph (X, E) is stochastically complete.

Note that the cubic rate of volume growth here is sharp. Indeed, Wojciechowski [35] has shown that, for any $\varepsilon > 0$ there is a stochastically incomplete graph that satisfies $V_\rho(x_0, r) \leq cr^{3+\varepsilon}$. For any non-negative integer r, set

$$S_\rho(r) = \{x \in X : \rho(x_0, x) = r\}. \tag{1.11}$$

In the example of Wojciechowski every vertex on $S_\rho(r)$ is connected to all vertices on $S_\rho(r-1)$ and $S_\rho(r)$ (see Fig. 1).

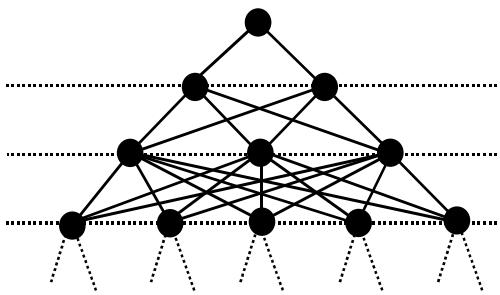

FIGURE 1. Anti-tree of Wojciechowski

For this type of graphs, that are called *anti-trees*, the stochastic incompleteness is equivalent to the following condition ([35]):

$$\sum_{r=1}^{\infty} \frac{V_\rho(x_0, r)}{|S_\rho(r+1)|\,|S_\rho(r)|} < \infty. \tag{1.12}$$

If $|S_\rho(r)| \simeq r^{2+\varepsilon}$ then $V_\rho(x_0, r) \simeq r^{3+\varepsilon}$ and the condition (1.12) is satisfied so that the graph is stochastically incomplete (the relation $f \simeq g$ means that the ratio of functions f and g is bounded from above and below by positive constants).

The proof of Theorem 1.4 is based on the following ideas. Firstly, the graph distance ρ is in general not adapted. Indeed, the integral in (1.5) is equal to $\deg(x)$

so that (1.5) holds if and only if the graph has uniformly bounded degree[1]. In general, we can construct an *adapted* distance d as follows. For all $x \sim y$ set

$$\sigma(x,y) = \frac{1}{\sqrt{\deg(x)}} \wedge \frac{1}{\sqrt{\deg(y)}} \tag{1.13}$$

and regard $\sigma(x,y)$ as the length for the edge $x \sim y$. Then for all $x, y \in X$ define $d(x,y)$ as the smallest total length of all edges in an edge chain connecting x and y. It is easy to verify that d satisfies (1.5). Then one proves that (1.10) for ρ-balls implies that the d-balls have at most exponential volume growth, so that the stochastic completeness follows by Theorem 1.3.

To see why the cubic volume growth for the graph distance is related to the exponential volume growth for the adapted distance, let us consider a more restrictive hypothesis

$$|S_\rho(r)| \le Cr^2 \quad \text{for } r \ge 1, \tag{1.14}$$

where $S_\rho(r)$ is defined by (1.11) (clearly, (1.14) is a stronger hypothesis than (1.10)). Any point $x \in S_\rho(r)$ admits the estimate of the degree as follows (see Fig. 2):

$$\deg(x) \le |S_\rho(r-1)| + |S_\rho(r)| + |S_\rho(r+1)| \le C_1 r^2. \tag{1.15}$$

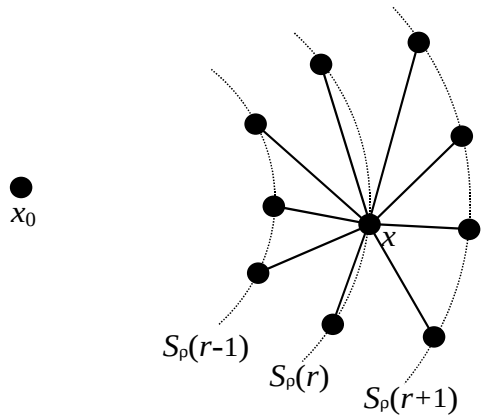

FIGURE 2. A vertex $x \in S_\rho(r)$ can be connected only to the vertices on $S_\rho(r-1)$, $S_\rho(r)$, and $S_\rho(r+1)$

Therefore, if x, y are two neighboring vertices in $B_\rho(x_0, r)$, then by (1.13) and (1.15)

$$\sigma(x,y) = \frac{1}{\sqrt{\deg(x)}} \wedge \frac{1}{\sqrt{\deg(y)}} \ge \frac{c_1}{r}, \tag{1.16}$$

with some constant $c_1 > 0$.

[1]In this case we have also $V(x,r) \le \exp(Cr)$ so that the graph is stochastically complete by Theorem 1.3. However, the stochastic completeness of graphs with bounded degrees can be proved much simpler – see [35] and [21].

Fix a vertex $x \in S_\rho(R)$ and let $\{x_i\}_{i=0}^N$ be a path connecting x_0 to x with the minimal σ-length (see Fig. 3). Clearly, we have $\rho(x_0, x_i) \le i$ whence it follows from (1.16) that $\sigma(x_{i-1}, x_i) \ge \frac{c_1}{i}$ and, hence for some $c_2 > 0$,

$$d(x_0, x) = \sum_{i=1}^{N} \sigma(x_{i-1}, x_i) \ge c_1 \sum_{i=1}^{R} \frac{1}{i} \ge c_2 \log R.$$

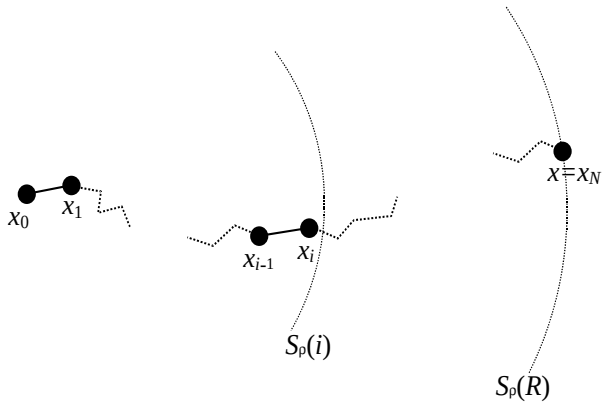

FIGURE 3. For any path $\{x_i\}_{i=0}^N$ connecting x_0 and $x \in S_\rho(R)$, we have $N \ge R$ and $\sigma(x_{i-1}, x_i) \ge \frac{c_1}{i}$.

Denoting by B_d the d-balls, we obtain

$$B_d(x_0, c_2 \log R) \subset B_\rho(x_0, R).$$

Changing variables $r = c_2 \log R$ and denoting by V_d the volume of B_d, we obtain using (1.10) that

$$V_d(x_0, r) \le V_\rho(x_0, e^{r/c_2}) \le \exp(c_3 r)$$

for some $c_3 > 0$ and all large enough r, which was claimed.

In the general case (1.10) does not imply (1.14) for all $r \ge 1$, but nevertheless (1.14) holds for sufficiently many values of r, which can be used to prove the estimates of d as above.

The paper is organized as follows. In Section 2 we introduce a general setting and study the stability of stochastic completeness under perturbation. As a consequence, we can reduce the study of stochastic completeness to the truncated jump kernel. In Section 3 we prove the stochastic completeness for the truncated jump kernel under the volume growth hypothesis (1.7), which finishes the proof of our main Theorem 1.3. Section 4 is devoted to applications of Theorem 1.3 to graphs. In particular, we give a proof of Theorem 1.4 based on the aforementioned ideas. In Section 5 we discuss some further examples and applications.

2. Perturbation of Dirichlet forms and stability of stochastic completeness

Let (X, d), μ and J be as in Introduction. Let us describe a bit more detailed the construction of the Dirichlet form $(\mathcal{E}, \mathcal{F})$ (see also [26]). The hypothesis (1.5)

implies that, for any $x \in X$ and $\varepsilon > 0$,

$$J\left(x, B\left(x, \varepsilon\right)^c\right) \leq \varepsilon^{-2} M.$$

Then one can use the identity

$$\int_{X \times X \setminus \mathrm{diag}} f\left(x, y\right) J\left(dx, dy\right) = \int_X \left(\int_{X \setminus \{x\}} f\left(x, y\right) J\left(x, dy\right) \right) \mu\left(dx\right)$$

to define a Radon measure $J\left(dx, dy\right)$ on $X \times X \setminus \mathrm{diag}$. That J is σ-additive follows from the monotone convergence theorem. If K is a compact subset of $X \times X \setminus \mathrm{diag}$ then denote by K' its projection onto X and by K_x its section at $x \in X$. Since K lies outside some ε-neighborhood of the diagonal, we obtain

$$J\left(K\right) = \int_{K'} J\left(x, K_x\right) \mu\left(dx\right) \leq \int_{K'} \varepsilon^{-2} M \mu\left(dx\right) \leq \varepsilon^{-2} M \mu\left(K'\right) < \infty,$$

which implies that J is a Radon measure.

Since we frequently integrate over $X \times X \setminus \mathrm{diag}$ against measure $J\left(x, y\right)$, we will use a short notation

$$X' = X \times X \setminus \mathrm{diag}\,.$$

By (1.4) measure $J\left(dx, dy\right)$ is symmetric in x, y. The identity (1.6) that defines $\mathcal{E}\left(f, g\right)$ can be rewritten in the form

$$\mathcal{E}(f, g) = \frac{1}{2} \int_{X'} (f(x) - f(y))(g(x) - g(y)) J(dx, dy). \tag{2.17}$$

Define the maximal domain of $\mathcal{E}$ by

$$\mathcal{F}_{\max} = \left\{ f \in L^2 : \mathcal{E}(f, f) < \infty \right\},$$

where $L^2 = L^2(X, \mu)$. By the polarization identity, $\mathcal{E}(f, g)$ is finite for all $f, g \in \mathcal{F}_{\max}$. Moreover, $\mathcal{F}_{\max}$ is a Hilbert space with the following norm:

$$\|f\|^2_{\mathcal{F}_{\max}} = \mathcal{E}_1(f, f) := \|f\|^2_{L^2} + \mathcal{E}(f, f).$$

Denote by $\mathrm{Lip}_0(X)$ the class of Lipschitz functions on X with compact support. It follows from (1.5) that $\mathrm{Lip}_0(X) \subset \mathcal{F}_{\max}$. Indeed, for any $f \in \mathrm{Lip}_0(X)$ we have

$$|f(x) - f(y)| \leq C \wedge (C d(x, y))$$

where $C = \max\left(\|f\|_{\mathrm{Lip}}, 2 \sup |f| \right)$ and $\|f\|_{\mathrm{Lip}}$ is the Lipschitz constant of f. Denoting $K = \operatorname{supp} f$, we obtain using (1.5)

$$\begin{aligned}
\mathcal{E}(f, f) &= \frac{1}{2} \int_{X'} (f(x) - f(y))^2 J(dx, dy) \\
&\leq \int_{K \times X \setminus \mathrm{diag}} (f(x) - f(y))^2 J(dx, dy) \\
&\leq C \int_K \int_{X \setminus \{x\}} (1 \wedge d(x, y)^2) J\left(x, dy\right) \mu\left(dx\right) \\
&\leq C M \mu(K) < \infty,
\end{aligned}$$

which proves that $f \in \mathcal{F}_{\max}$.

Define the space $\mathcal{F}$ as the closure of $\mathrm{Lip}_0(X)$ in $(\mathcal{F}_{\max}, \|\cdot\|_{\mathcal{F}_{\max}})$. Under the above hypothesis, $(\mathcal{E}, \mathcal{F})$ is a regular Dirichlet form in $L^2(X, \mu)$ (see [26, 7]). We refer to $\mathcal{F}$

as the *minimal* domain of $\mathcal{E}$. As any Dirichlet form, $(\mathcal{E}, \mathcal{F})$ has the generator: a non-negative definite self-adjoint operator Δ in L^2 with the property that $\mathrm{dom}\,(\Delta) \subset \mathcal{F}$ and

$$(\Delta f, g) = \mathcal{E}(f, g) \quad \text{for all } f \in \mathrm{dom}(\Delta) \quad \text{and} \quad g \in \mathcal{F}.$$

The generator determines the heat semigroup $P_t = e^{-t\Delta}$, $t \geq 0$. Apart from being a bounded self-adjoint operator in L^2, the operator P_t has the following Markovian properties:

$$f \geq 0 \Rightarrow P_t f \geq 0 \quad \text{and} \quad f \leq 1 \Rightarrow P_t f \leq 1.$$

They allow to extend the operator P_t to a contraction operator on all spaces L^p, in particular, on L^∞.

By [12], for any regular Dirichlet form there exists a Hunt process $\{\mathcal{X}_t\}_{t\geq 0}$ such that, for all bounded Borel functions f on X,

$$\mathbb{E}_x f(\mathcal{X}_t) = P_t f(x) \tag{2.18}$$

for all $t > 0$ and almost all $x \in X$, where $\mathbb{E}_x$ is expectation associated with the law of $\mathcal{X}_t$ started at x. For the Dirichlet form $(\mathcal{E}, \mathcal{F})$, the process $\mathcal{X}_t$ is a pure jump process with the jump kernel $J(x, dy)$.

Using the identity (2.18), one can show that the lifetime of $\mathcal{X}_t$ is almost surely ∞ if and only if $P_t 1 = 1$ for all $t > 0$. This observation motivates the following definition.

Definition 2.1. *The semigroup P_t is called stochastically complete if $P_t 1 = 1$ for all $t > 0$. Otherwise it is called stochastically incomplete.*

For simplicity of terminology, we also say that the Dirichlet form $(\mathcal{E}, \mathcal{F})$ (or its generator Δ) is stochastically complete if so is the associated heat semigroup P_t.

Suppose we are given three jump kernels J, J', and J'' satisfying the hypotheses (1.4), (1.5) and the relation

$$J = J' + J''.$$

Assume that J'' satisfies a stronger hypothesis: there is a positive constant M such that

$$\sup_{x\in X} \int_X J''(x, dy) \leq M. \tag{2.19}$$

Let $\mathcal{E}$, $\mathcal{E}'$ and $\mathcal{E}''$ be the quadratic forms of J, J', J'' respectively, defined through (1.6). As before, let $\mathcal{F}$ be the minimal domain of $\mathcal{E}$. Denote by $\mathcal{F}'$ the minimal domain of $\mathcal{E}'$.

The main result of this section is the following result about the stability of stochastic completeness.

Theorem 2.2. *J, J' and J'' satisfy the above hypotheses. Then $(\mathcal{E}, \mathcal{F})$ is stochastically complete if and only if so is $(\mathcal{E}', \mathcal{F}')$.*

Hence, J'' can be regarded as a small perturbation of J'. The proof of Theorem 2.2 requires some preparation.

Lemma 2.3. *Under the above hypothesis, we have $\mathcal{F} = \mathcal{F}'$.*

Proof. First we notice that, for any Borel function $f \in L^2(X,\mu)$,

$$\begin{aligned}
\mathcal{E}''(f,f) &= \frac{1}{2}\int_{X'}(f(x)-f(y))^2 J''(dx,dy) \\
&\le \int_{X'}(f(x)^2+f(y)^2)J''(dx,dy) \\
&= 2\int_{X'} f(x)^2 J''(dx,dy) \\
&\le 2M\|f\|_2^2 \qquad (2.20)
\end{aligned}$$

where we have used (2.19) and the symmetry of $J''(dx,dy)$. Using $\mathcal{E}(f)=\mathcal{E}'(f)+\mathcal{E}''(f)$ and (2.20) we obtain

$$\mathcal{E}_1'(f) \le \mathcal{E}_1(f) = \mathcal{E}'(f)+\mathcal{E}''(f)+\|f\|_2^2 \le (2M+1)\left(\mathcal{E}'(f)+\|f\|_2^2\right) = (2M+1)\,\mathcal{E}_1'(f).$$

Hence, the norms $\sqrt{\mathcal{E}_1}$ and $\sqrt{\mathcal{E}_1'}$ are equivalent, and the closures of $\mathrm{Lip}_0(X)$ with respect to them are the same, i.e. $\mathcal{F}=\mathcal{F}'$. □

It will be convenient to use the following criterion for stochastic completeness, which is a part of theorem 1.6.6 in [12].

Proposition 2.4. *A Dirichlet form $(\mathcal{E},\mathcal{F})$ is stochastically complete if and only if there exists a sequence $\{u_n\}_{n=1}^{\infty}\subset\mathcal{F}$ such that*

(1) $0 \le u_n(x) \le 1$,
(2) $u_n(x) \to 1$ *μ-a.e. as* $n\to\infty$,
(3) $\mathcal{E}(u_n,v)\to 0$ *for any* $v\in\mathcal{F}\cap L^1(X,\mu)$.

In order to be able to use this criterion, we need the following two elementary lemmas.

Lemma 2.5. *If $A\in\mathcal{B}(X)$ and $\mu(A)=0$, then*

$$\int_{(A\times X)\cup(X\times A)} J''(dx,dy)=0.$$

Proof. Applying Fubini's theorem, the symmetry of J'' and (2.19), we obtain

$$\int_{X\times A} J''(dx,dy) = \int_{A\times X} J''(dx,dy) = \int_A\int_X J''(x,dy)\,\mu(dx) \le M\mu(A)=0.$$

□

Lemma 2.6. *Let $\{u_n\}$ be a sequence of measurable functions on X such that*

$$0\le u_n(x)\le 1, \quad \text{and} \quad u_n(x)\to 1 \quad \mu\text{-a.e.} \quad \text{as} \quad n\to\infty.$$

Then for any $v\in L^1(X,\mu)$ we have

$$\lim_{n\to\infty}\mathcal{E}''(u_n,v)=0.$$

Proof. Since $u_n(x)\to 1$ μ-*a.e.*, we have $u_n(x)\to 1$ for any $x\in X\setminus A$ for some Borel set A with $\mu(A)=0$. It follows that

$$\lim_{n\to\infty} v(x)(u_n(x)-u_n(y))=0 \quad \text{for all } x,y\in X\setminus A.$$

Since the complement of $(X \setminus A) \times (X \setminus A)$ in $X \times X$ is $(A \times X) \cup (X \times A)$ and the latter set a $J''(dx, dx)$-null set by Lemma 2.5, it follows that

$$v(x)(u_n(x) - u_n(y)) \to 0 \quad J''(dx, dy)\text{-}a.e.$$

Noticing that $|v(x)(u_n(x) - u_n(y))| \leq |v(x)|$ and $|v(x)|$ is $J''(dx, dy)$-integrable by

$$\int_{X \times X} |v(x)| J''(dx, dy) = \int_X \int_X |v(x)| J''(x, dy) \mu(dx) \leq M \|v\|_1,$$

we obtain by Lebesgue's dominated convergence theorem, that

$$\lim_{n \to \infty} \int_{X \times X} v(x)(u_n(x) - u_n(y)) J''(dx, dy) = 0.$$

By symmetry , we have

$$\lim_{n \to \infty} \int_{X \times X} v(y)(u_n(x) - u_n(y)) J''(dx, dy) = 0,$$

whence $\mathcal{E}''(u_n, v) \to 0$ follows. □

Now we can complete the proof of our main result in this section.

Proof of Theorem 2.2. It suffices to prove that the stochastic completeness of $(\mathcal{E}', \mathcal{F}')$ implies that of $(\mathcal{E}, \mathcal{F})$. By Lemma 2.3 we have $\mathcal{F}' = \mathcal{F}$. Applying Proposition 2.4 to $(\mathcal{E}', \mathcal{F})$ we obtain that there is a sequence $\{u_n\} \subset \mathcal{F}$such that

(1) $0 \leq u_n(x) \leq 1$,
(2) $u_n(x) \to 1, \mu\text{-}a.e.$,
(3) $\mathcal{E}'(u_n, v) \to 0$ for any $v \in \mathcal{F} \cap L^1(X, \mu)$.

By Lemma 2.6 we have, for any $v(x) \in \mathcal{F} \cap L^1(X, \mu)$,

$$\mathcal{E}(u_n, v) - \mathcal{E}'(u_n, v) = \mathcal{E}''(u_n, v) \to 0 \quad \text{as } n \to \infty.$$

Hence, $\mathcal{E}(u_n, v) \to 0$, which implies by Proposition 2.4 that $(\mathcal{E}, \mathcal{F})$ is stochastically complete. The converse direction is similar. □

3. Stochastic completeness under the volume growth

Here we prove Theorem 1.3. Given a jump kernel J satisfying (1.4) and (1.5), define J' and J'' as in (1.9), that is

$$J'(x, dy) = J(x, dy)\mathbf{1}_{B(x,1)} \quad \text{and } J''(x, dy) = J(x, dy)\mathbf{1}_{B(x,1)^c}.$$

Obviously, both J' and J'' satisfy (1.4) and (1.5). Moreover, we have

$$\int_X J''(x, dy) = \int_{B(x,1)^c} J(x, dy) = \int_{B(x,1)^c} \left(1 \wedge d(x, y)^2\right) J(x, dy) \leq M$$

so that J'' satisfies (2.19). By Theorem 2.2, it suffices to prove that $(\mathcal{E}', \mathcal{F}')$ is stochastically complete.

The idea of truncation of jump kernel has been fruitfully used by a number of authors to answer various questions related to the jump processes. For example, Chen and Kumagai [6], [7] used it to obtain heat kernel estimates for certain jump kernel. In the present setting the truncation of jump kernel was used by Masamune and Uemura [26], who also proved the stability of the stochastic completeness with respect to truncation. Our proof of Theorem 2.2 is different from the one in [26].

In the rest of this section, we rename J' to J so that the measure $J(x,\cdot)$ is supported in $B(x,1)$. In particular, this assumption and (1.5) imply that

$$\sup_{x\in X}\int_{X\setminus\{x\}} d^2(x,y)\,J(x,dy)\le M. \tag{3.21}$$

Before we can finish the proof of Theorem 1.3, we state some elementary facts. Denote by $\langle\cdot,\cdot\rangle$ the inner product in $L^2(X,\mu)$.

Lemma 3.1. *Let g be a non-negative bounded measurable function on X. If for any $f\in \mathrm{Lip}_0(X)$, $\int_X fgd\mu=0$ then $g=0$ μ-a.e.*

Proof. Let g be not equal to 0 almost everywhere. Without loss of generality, we can assume that $\operatorname{esssup} g>0$. Then there exists $\varepsilon>0$ such that

$$\mu(\{x\in X: g(x)>\varepsilon\})>0.$$

Since μ is a Radon measure, there exists a compact subset K of $\{x\in X: g(x)>\varepsilon\}$ such that $\mu(K)>0$. Consider the function $f(x)=(1-d(x,K))_+$ that belongs to $\mathrm{Lip}_0(X)$. Since $f\ge 0$ and $f|_K=1$, we obtain $\int_X fgd\mu\ge\varepsilon\mu(K)>0$, which contradicts hypothesis. □

The following lemma will be used as our basic criterion for stochastic completeness.

Lemma 3.2. *Let $\{g_n\}$ be an increasing sequence of non-negative functions from $L^2\cap L^\infty(X,\mu)$ such that*

$$\lim_{n\to\infty} g_n=1\quad \mu\text{-a.e.}$$

If, for some $t>0$ and for any $f\in\mathrm{Lip}_0(X)$,

$$\lim_{n\to\infty}\langle f-P_tf,g_n\rangle=0 \tag{3.22}$$

then $P_t1=1$ μ-a.e..

Proof. Using the symmetry of P_t and (3.22), we obtain, for any $f\in\mathrm{Lip}_0(X)$,

$$\langle f,g_n-P_tg_n\rangle=\langle f-P_tf,g_n\rangle\to 0 \tag{3.23}$$

as $n\to\infty$. By definition of P_t1,

$$P_t1=\lim_{n\to\infty}P_tg_n$$

whence

$$\lim_{n\to\infty}(g_n-P_tg_n)=1-P_t1,$$

where all limits are understood μ-a.e.. Noticing that

$$|f(g_n-P_tg_n)|\le|f|$$

we obtain by Lebesgue's dominated convergence theorem and (3.23) that

$$\int_X f(1-P_t1)\,d\mu=\lim_{n\to\infty}\int_X f(g_n-P_tg_n)d\mu=0.$$

By Lemma 3.1 we conclude that $1-P_t1=0$ μ-a.e., which was to be proved. □

As before, let Δ denote the (positive definite) generator of $(\mathcal{E},\mathcal{F})$ and $\mathcal{D}(\Delta)$ – its domain. Let $\{E_\lambda\}_{\lambda\geq 0}$ be the spectral resolution of Δ (cf. [25], [19]). By the functional calculus we have for any $f\in L^2(X,\mu)$

$$P_t f=\exp(-t\Delta)\,f=\int_0^\infty \exp(-t\lambda)dE_\lambda f. \tag{3.24}$$

Lemma 3.3. *For any $f\in L^2(X,\mu)$ and for any $t>0$, $P_t f\in\mathcal{D}(\Delta)$ and*

$$\frac{d}{dt}(P_t f)=-\Delta(P_t f)=\int_0^\infty \lambda\exp(-t\lambda)dE_\lambda f, \tag{3.25}$$

where $\frac{d}{dt}$ is the strong derivative in $L^2(X,\mu)$.

See [19, Section 4.3].

Lemma 3.4. *Let $f,g\in L^2(X,\mu)$ and $\psi\in L^\infty(X,\mu)$. Then each of the following two functions*

$$t\mapsto\langle P_t f,g\rangle,\qquad t\mapsto\langle\psi P_t f,\psi P_t g\rangle, \tag{3.26}$$

is continuous in $t\geq 0$ and continuously differentiable in $t>0$.

Proof. Indeed, it follows from (3.24) that $P_t f$ is strongly continuous in $t\geq 0$ as a path in L^2, and from (3.25) that $\frac{d}{dt}(P_t f)$ is strongly continuous in $t>0$. Since multiplication by ψ is a bounded operator in L^2, we obtain the same properties for $\psi P_t f$. Consequently, the functions in (3.26) are continuous in $t\geq 0$ and continuously differentiable in $t>0$. □

We denote by Lip_b the space of bounded Lipschitz functions on (X,d) and by $\mathcal{F}_b$ the space of bounded functions from $\mathcal{F}(X,\mu)$.

Lemma 3.5. *If $u\in\mathcal{F}$ and $\psi\in\mathrm{Lip}_b(X)$, then $\psi u\in\mathcal{F}$.*

Proof. This proof is taken from [26, Lemma 2.1]. If $u\in\mathrm{Lip}_0$ then $u\psi\in\mathrm{Lip}_0$ whence $\psi u\in\mathcal{F}$ follows. An arbitrary function $u\in\mathcal{F}$ can be approximated by a sequence of functions $\{u_n\}$ from Lip_0 that converges to u in $\mathcal{E}_1$. Then $\psi u_n\to\psi u$ in $\mathcal{E}_1$ which follows from the following inequality that is true for all $u\in\mathcal{F}$ and $\psi\in\mathrm{Lip}_0$:

$$\mathcal{E}(\psi u)\leq\sup|\psi|^2\,\mathcal{E}(u)+M\,\|\psi\|_{\mathrm{Lip}}^2\,\|u\|_{L^2}^2\,.$$

Indeed, using the definition of $\mathcal{E}$, the symmetry of J and (3.21), we obtain

$$\begin{aligned}
\mathcal{E}(\psi u) &= \frac{1}{2}\int_{X'}(\psi(x)\,u(x)-\psi(y)\,u(y))^2\,J(dx,dy)\\
&= \frac{1}{2}\int_{X'}(\psi(x)\,(u(x)-u(y))+(\psi(x)-\psi(y))\,u(y))^2\,J(dx,dy)\\
&\leq \int_{X'}\psi^2(x)\,(u(x)-u(y))^2\,J(dx,dy)\\
&\quad+\int_X\int_{X\setminus\{y\}}(\psi(x)-\psi(y))^2\,u(y)^2\,J(dx,y)\,\mu(dy)\\
&\leq \sup|\psi|^2\,\mathcal{E}(u)+\|\psi\|_{\mathrm{Lip}}^2\int_X u(y)^2\,\mu(dy)\int_{X\setminus\{y\}}d^2(x,y)\,J(dx,y)\\
&\leq \sup|\psi|^2\,\mathcal{E}(u)+M\,\|\psi\|_{\mathrm{Lip}}^2\,\|u\|_{L^2}^2\,.
\end{aligned}$$

□

Lemma 3.6. *For all $u, v \in \mathcal{F}_b$ and $w \in \mathrm{Lip}_b(X)$, we have*

$$\mathcal{E}(u, vw) = \frac{1}{2}\int_{X'} v(x)(u(x)-u(y))(w(x)-w(y))J(dx,dy) \tag{3.27}$$

$$+\frac{1}{2}\int_{X'} w(x)(u(x)-u(y))(v(x)-v(y))J(dx,dy). \tag{3.28}$$

The identity (3.27)-(3.28) can be considered as a version of the Leibniz formula for the non-local form $(\mathcal{E}, \mathcal{F})$.

Proof. The proof is taken from [26, Proposition 2.2] and [27]. By Lemma 3.5 $vw \in \mathcal{F}$ so that $\mathcal{E}(u, vw)$ makes sense. The integral (3.28) converges because w is bounded while $u, v \in \mathcal{F}$. The integral (3.27) converges because the integrand is bounded by

$$|v(x)|\,|u(x)-u(y)|\,\|w\|_{\mathrm{Lip}}\, d(x,y)$$

and, by the Cauchy-Schwarz inequality and (3.21),

$$\begin{aligned}
&\int_{X'} |v(x)|\,|u(x)-u(y)|\, d(x,y)\, J(dx,dy)\\
\le\ & \mathcal{E}(u)^{1/2}\left(\int_{X'} v(x)^2 d^2(x,y)\, J(dx,dy)\right)^{1/2}\\
=\ & \mathcal{E}(u)^{1/2}\left(\int_X v(x)^2 \mu(dx)\int_{X\setminus\{x\}} d^2(x,y)\, J(x,dy)\right)^{1/2}\\
\le\ & \mathcal{E}(u)^{1/2}\|v\|_{L^2} M^{1/2}.
\end{aligned}$$

Next, observe that the following the pointwise identity is true:

$$\begin{aligned}
&(u_x-u_y)(v_xw_x-v_yw_y) - v_x(u_x-u_y)(w_x-w_y) - w_x(u_x-u_y)(v_x-v_y)\\
=\ & -(u_x-u_y)(v_xw_x-v_yw_y) + v_y(u_x-u_y)(w_x-w_y) + w_y(u_x-u_y)(v_x-v_y),
\end{aligned} \tag{3.29}$$

where we write for brevity $u(x) = u_x$ etc. Therefore, the function (3.29) is a skew-symmetric function of x, y, and integration of this function against the symmetric measure $J(dx, dy)$ yields 0, whence the identity (3.27)-(3.28) follows. □

The following statement provides a key estimate, that is motivated by B.Davies's approach in the local setting (cf. [8]).

Proposition 3.7. *Let ψ be a positive function on X such that $\log\psi$ is a bounded non-negative Lipschitz function with the Lipschitz constant a. Let $f \in \mathrm{Lip}_0(X)$ be such that $\psi \equiv 1$ on $\operatorname{supp} f$. Set $u_t = P_t f$. Then the following inequality holds for all $t > 0$:*

$$\int_0^t \int_{X'} (u_s(x)-u_s(y))^2 \psi(x)^2 J(dx,dy)\, ds \le 4e^{Ma^2e^{2a}t}\|f\|_2^2. \tag{3.30}$$

Proof. Note that ψ and ψ^2 are bounded Lipschitz functions. By Lemma 3.3 we have

$$\frac{d}{ds}\|u_s\psi\|^2 = \frac{d}{ds}\langle u_s\psi, u_s\psi\rangle = -2\langle \psi\Delta u_s, \psi u_s\rangle = -2\langle \Delta u_s, \psi^2 u_s\rangle = -2\mathcal{E}(u_s, \psi^2 u_s). \tag{3.31}$$

On the other hand, we have by Lemma 3.6

$$
\begin{aligned}
-2\mathcal{E}(u_s,\psi^2 u_s) &= -\int_{X'} u_s(x)(u_s(x)-u_s(y))(\psi(x)^2-\psi(y)^2)J(dx,dy) \\
&\quad -\int_{X'} \psi(x)^2(u_s(x)-u_s(y))^2 J(dx,dy) \\
&\le \frac{1}{4}\int_{X'} (u_s(x)-u_s(y))^2(\psi(x)+\psi(y))^2 J(dx,dy) \qquad (3.32)\\
&\quad +\int_{X'} u_s(x)^2(\psi(x)-\psi(y))^2 J(dx,dy) \qquad (3.33)\\
&\quad -\int_{X'} (u_s(x)-u_s(y))^2\psi(x)^2 J(dx,dy) \qquad (3.34)
\end{aligned}
$$

where we have used the inequality

$$AB \le \frac{1}{4}A^2 + B^2 \tag{3.35}$$

with

$$A = (u_s(x)-u_s(y))(\psi(x)+\psi(y)), \qquad B = u_s(x)(\psi(x)-\psi(y)).$$

Using

$$(\psi(x)+\psi(y))^2 \le 2(\psi(x)^2+\psi(y)^2)$$

and the symmetry of $J(dx,dy)$, we estimate the integral (3.32) as follows:

$$
\begin{aligned}
&\frac{1}{4}\int_{X'} (u_s(x)-u_s(y))^2(\psi(x)+\psi(y))^2 J(dx,dy) \\
\le\ &\frac{1}{2}\int_{X'} (u_s(x)-u_s(y))^2(\psi(x)^2+\psi(y)^2) J(dx,dy) \\
=\ &\int_{X'} (u_s(x)-u_s(y))^2\psi(x)^2 J(dx,dy), \qquad (3.36)
\end{aligned}
$$

which cancels out with (3.34).

In order to handle the remaining integral (3.33), observe first that, by the Lipschitz condition of $\log\psi$,

$$e^{-ad(x,y)} \le \frac{\psi(y)}{\psi(x)} \le e^{ad(x,y)},$$

for all $x,y\in X$. It follows that

$$|\psi(x)-\psi(y)| = \left|\frac{\psi(y)}{\psi(x)}-1\right|\psi(x) \le \left(e^{ad(x,y)}-1\right)\psi(x) \le ad(x,y)\,e^{ad(x,y)}\psi(x). \tag{3.37}$$

Recall that integration against measure $J(dx,dy)$ can be restricted to $d(x,y)\le 1$. Hence, in this range we obtain from (3.37)

$$|\psi(x)-\psi(y)| \le ae^a d(x,y)\psi(x).$$

Using this inequality and (3.21), we obtain

$$\begin{aligned}
&\int_{X'} u_s(x)^2(\psi(x)-\psi(y))^2 J(dx,dy) \\
\le\ & a^2e^{2a}\int_X\int_{X\setminus\{x\}} u_s(x)^2\psi(x)^2 d(x,y)^2 J(x,dy)\,\mu(dx) \\
\le\ & Ma^2e^{2a}\int_X u_s(x)^2\psi(x)^2\mu(dx) \\
=\ & C\left\|u_s\psi\right\|_2^2, \qquad (3.38)
\end{aligned}$$

where

$$C = Ma^2e^{2a}.$$

It follows from (3.31) and (3.33) that

$$\frac{d}{ds}\left\|u_s\psi\right\|_2^2 \le C\left\|u_s\psi\right\|_2^2.$$

By Gronwall's lemma, we obtain

$$\left\|u_t\psi\right\|_2^2 \le \exp(Ct)\left\|f\psi\right\|_2^2.$$

Since $\psi = 1$ on $\operatorname{supp} f$, we have $f\psi \equiv f$, which implies

$$\left\|u_t\psi\right\|_2^2 \le \exp(Ct)\left\|f\right\|_2^2. \qquad (3.39)$$

Now we repeat the estimate (3.32)-(3.34) using instead of (3.35) the inequality

$$AB \le \frac{1}{8}A^2 + 2B^2,$$

which together with (3.31) yields

$$\begin{aligned}
\frac{d}{ds}\left\|u_s\psi\right\|_2^2 \le\ & \frac{1}{8}\int_{X'}(u_s(x)-u_s(y))^2(\psi(x)+\psi(y))^2 J(dx,dy) \\
&+2\int_{X'} u_s(x)^2(\psi(x)-\psi(y))^2 J(dx,dy) \\
&-\int_{X'}(u_s(x)-u_s(y))^2\psi(x)^2 J(dx,dy).
\end{aligned}$$

Substituting the estimates (3.36) and (3.38), we obtain

$$\frac{d}{ds}\left\|u_s\psi\right\|_2^2 \le 2C\left\|u_s\psi\right\|_2^2 - \frac{1}{2}\int_{X'}(u_s(x)-u_s(y))^2\psi(x)^2 J(dx,dy).$$

Combining with (3.39) yields

$$\frac{d}{ds}\left\|u_s\psi\right\|_2^2 + \frac{1}{2}\int_{X'}(u_s(x)-u_s(y))^2\psi(x)^2 J(dx,dy) \le 2Ce^{Cs}\left\|f\right\|_2^2.$$

Finally, integrating the both sides from 0 to t, we obtain

$$\left\|u_t\psi\right\|_2^2 - \left\|f\right\|_2^2 + \frac{1}{2}\int_0^t\int_{X'}(u_s(x)-u_s(y))^2\psi(x)^2 J(dx,dy)\,ds \le 2(e^{Ct}-1)\left\|f\right\|_2^2,$$

whence (3.30) follows. □

After all these preparations, we are in position to finish the proof of Theorem 1.3. As above, we assume that $J(x, dy)$ is supported in $B(x, 1)$.

Proof of Theorem 1.3. Fix a point x_0, set $r(x) = d(x, x_0)$ and consider the family of functions $\{g_n\}_{n>0}$defined as follows:

$$g_n(x) = ((n+2) - r(x))_+ \wedge 1 = \begin{cases} 1, & r(x) \le n+1, \\ n+2-r(x), & n+1 \le r(x) \le n+2, \\ 0, & r(x) \ge n+2, \end{cases}$$

It is easy to see that $0 \le g_n \in \mathrm{Lip}_0(X)$ and $g_n(x) \uparrow 1$ as $n \to \infty$. Also, for any $n > 0$ define a function

$$\psi_n(x) = \exp\left(a\left(\left(r(x) - \tfrac{n}{2}\right)_+ \wedge \tfrac{n}{2}\right)\right) = \begin{cases} 1, & r(x) \le \frac{n}{2}, \\ e^{a\left(r(x)-\frac{n}{2}\right)}, & \frac{n}{2} \le r(x) \le n, \\ e^{\frac{1}{2}an}, & r(x) \ge n, \end{cases}$$

where $a > 0$ is a free parameter. Note that $\psi_n \equiv 1$ on $B\left(x_0, \frac{n}{2}\right)$ and $\log \psi_n$ is a non-negative bounded Lipschitz function with the Lipschitz constant a (see Fig. 4). That is, ψ_n satisfies the hypotheses of Proposition 3.7 and, hence, the latter can be applied with any function $f \in \mathrm{Lip}_0\left(B\left(x_0, \frac{n}{2}\right)\right)$.

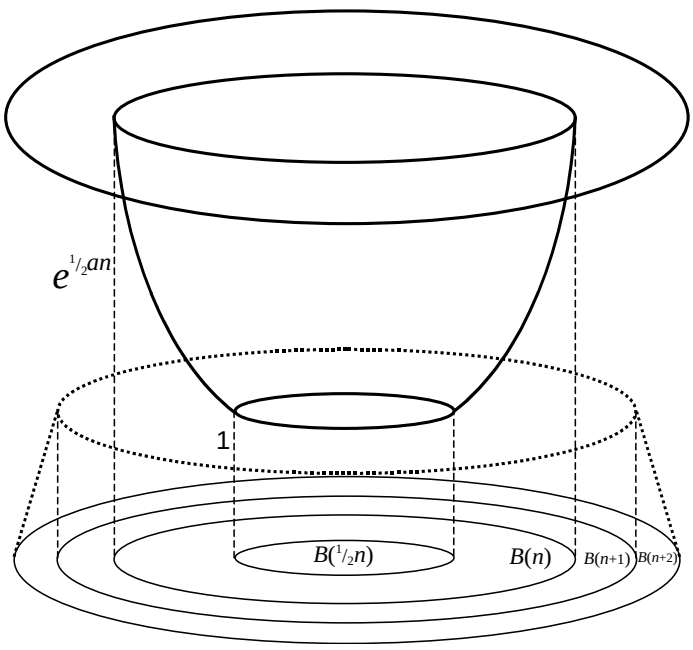

FIGURE 4. Functions g_n (dotted line) and ψ_n (bold line). Here $B(r) \equiv B(x_0, r)$.

By Lemma 3.2, we only need prove that

$$\lim_{n\to\infty} \langle u_t - f, g_n \rangle = 0 \tag{3.40}$$

for all $f \in \mathrm{Lip}_0(X)$ and $t > 0$, where $u_t = P_t f$. Fix f and t and write

$$\langle u_t - f, g_n\rangle = \langle u_t, g_n\rangle - \langle f, g_n\rangle = \int_0^t \frac{d}{ds}\langle u_s, g_n\rangle ds = -\int_0^t \langle \Delta u_s, g_n\rangle ds = -\int_0^t \mathcal{E}(u_s, g_n) ds.$$

By the Cauchy-Schwarz inequality we obtain

$$\begin{aligned}
\langle u_t - f, g_n\rangle^2 &= \left(\int_0^t \mathcal{E}(u_s, g_n) ds\right)^2 \\
&= \frac{1}{4}\left\{\int_0^t \int_{X'} (u_s(x) - u_s(y))(g_n(x) - g_n(y)) J(dx, dy)\, ds\right\}^2 \\
&\le \frac{1}{4}\int_0^t \int_{X'} (u_s(x) - u_s(y))^2 \psi_n(x)^2 J(dx, dy)\, ds \qquad (3.41)\\
&\quad \times \int_0^t \int_{X'} (g_n(x) - g_n(y))^2 \psi_n(x)^{-2} J(dx, dy)\, ds. \qquad (3.42)
\end{aligned}$$

The integral (3.41) can be estimated by Proposition 3.7, provided n is large enough so that $\operatorname{supp} f \subset B\left(x_0, \frac{n}{2}\right)$. To estimate the integral (3.42), restrict the domain of integration to $d(x, y) \le 1$ and observe that if $x \notin B(x_0, n+3) \setminus B(x_0, n)$ and $d(x, y) \le 1$ then $g_n(x) = g_n(y) = 0$. Using also that $\|g_n\|_{\mathrm{Lip}} \le 1$ and (3.21), we obtain

$$\begin{aligned}
&\int_{X'} (g_n(x) - g_n(y))^2 \psi_n(x)^{-2} J(dx, dy)\, ds \\
&= \int_{B(x_0,n+3)\setminus B(x_0,n)} \psi_n(x)^{-2} \int_{X\setminus\{x\}} (g_n(x) - g_n(y))^2 J(dx, dy) \\
&\le \int_{B(x_0,n+3)\setminus B(x_0,n)} \psi_n(x)^{-2} \int_{X\setminus\{x\}} d(x, y)^2 J(dx, dy) \\
&\le M \int_{B(x_0,n+3)\setminus B(x_0,n)} \psi_n(x)^{-2} \mu(dx) \\
&\le M e^{-an} V(x_0, n+3), \qquad (3.43)
\end{aligned}$$

where in the last line we have used that $\psi_n(x)^2 = e^{an}$ on $B(x_0, n)^c$. Substituting (3.43) into (3.42) and estimating the integral (3.41) by Proposition 3.7, we obtain

$$\langle u_t - f, g_n\rangle^2 \le Mt \exp(-an + \log V(x_0, n+3) + Mte^{2a}a^2) \|f\|_2^2. \qquad (3.44)$$

By hypothesis (1.7), there is a sequence of values of n that goes to ∞ and such that

$$\log V(x_0, n+3) \le bn \log n,$$

where $b < \frac{1}{2}$. Choose c so that $b < c < \frac{1}{2}$ and set in (3.44) $a = c \log n$, which yields

$$\langle u_t - f, g_n\rangle^2 \le Mt \exp(-cn \log n + bn \log n + Mtc^2 n^{2c} \log^2 n) \|f\|_2^2. \qquad (3.45)$$

Since $2c < 1$ and $c > b$, we see that the term $-cn \log n$ dominates and the right hand side of (3.45) goes to 0 as $n \to \infty$, whence (3.40) follows. □

4. Stochastic completeness of random walks on graphs

Theorem 1.3 can be applied to study stochastic completeness for a family of weighted graphs. We generally follow the setting of Keller and Lenz [23] despite that we're more restrictive here to avoid topological considerations. Let (X, E) be a locally finite, connected, infinite undirected graph without loops and multi-edges. Here X is the set of vertices and E is the set of edges which can be viewed as a subset of $X \times X$. All graphs under discussion will be of this type without specification. For $(x, y) \in E$, we write $x \sim y$ for short. We call a sequence of points $x_0, \cdots, x_n$ a chain connecting x and y if $x_0 = x, x_n = y$ and $x_i \sim x_{i+1}$ for all $i = 0, 1, ..., n-1$. The number n is called the length of this chain. A natural graph metric ρ can be defined on X as the minimal length of chains connecting two distinct points. Let $\mu(x)$ be a positive function on X such that for any $x \in X$,

$$\mu(x) > C$$

for some constant $C > 0$. Then μ can be viewed as a Radon measure on (X, ρ) with full support, and (X, ρ, μ) forms a locally compact metric measure space. Let $w(x, y)$ be a function on $X \times X$ that satisfies:

(1) $w(x, y) \geq 0$;
(2) $w(x, y) = w(y, x)$;
(3) $w(x, y) > 0 \Leftrightarrow (x, y) \in E$.

Note that since we only consider graphs without loops, w vanishes on the diagonal of $X \times X$. The triple (X, w, μ) will be called a weighted graph. We call the quantity

$$\deg(x) := \frac{1}{\mu(x)} \sum_{y \in X} w(x, y)$$

the weighted degree of $x \in X$ to be distinct from the usual degree of locally finite graphs.

A quadratic form Q can be defined on the space of finitely supported functions $C_0(X) = \mathrm{Lip}_0(X)$ as:

$$Q(u) = \frac{1}{2} \sum_{x, y \in X} w(x, y)(u(x) - u(y))^2.$$

Here the jump kernel $J(x, dy) = \frac{w(x,y)}{\mu(x)\mu(y)} d\mu\,(y)$ to fit in our general setting. Q is closable and its closure is a regular Dirichlet form which we also denote by Q. It corresponds to a nonnegative self adjoint operator Δ on $L^2(X, \mu)$ which is a restriction of the following formal Laplacian:

$$\tilde{\Delta} f(x) = \frac{1}{\mu(x)} \sum_{y} w(x, y)(f(x) - f(y))$$

The operator Δ generates a heat semigroup $P_t = \exp(-t\Delta)$ which can be extended to $L^\infty(X, \mu)$. For more details, see [23].

As we already mentioned, the graph metric ρ is generally adapted to $J(x, dy)$ since

$$\int_X 1 \wedge \rho(x, y)^2 J(x, dy) = \sum_{y, y \sim x} \frac{w(x, y)}{\mu(x)} \rho(x, y)^2 = \deg(x),$$

that is not necessarily bounded. It's then natural to introduce a new metric d which is adapted to the jump kernel $J(x, dy)$. The idea is that we can get more reasonable volume growth criteria with respect to this new metric d and then translate back to volume growth with respect to graph metric ρ.

Definition 4.1. *Define a function $\sigma(x, y)$ for all $x \sim y$ by*

$$\sigma(x, y) = \min\left\{\frac{1}{\sqrt{\deg(x)}}, \frac{1}{\sqrt{\deg(y)}}, 1\right\}. \tag{4.46}$$

It naturally induces a metric d on X as follows: for all distinct point x, y,

$$d(x, y) := \inf\{\sum_{i=0}^{n-1} \sigma(x_i, x_{i+1}) : x_0, x_1, \cdots, x_n \text{ is a chain connecting } x \text{ and } y.\} \tag{4.47}$$

Remark 4.2. This definition is inspired by a general notion of intrinsic metric introduced by Frank, Lenz and Wingert [11] where they focus on applications to spectral properties. Folz [10] also came up with similar ideas independently in the context of heat kernel estimates.

Thanks to the locally finiteness of (X, E), we can observe that for any $x \in X$,

$$B_d(x, \frac{1}{2}\min_{y\sim x}\sigma(x, y)) = \{x\}.$$

Then (X, d) is a discrete space and $\mathrm{Lip}_0(X) = C_0(X)$ remains true. In particular, (X, d) is locally compact together with the Radon measure μ on it. Again, $J(x, dy) = \frac{w(x,y)}{\mu(x)\mu(y)} d\mu(y)$ forms a jump kernel on (X, d, μ) with the domain of Dirichlet form invariant. An easy calculation will show (1.5) is true:

$$\int_X 1 \wedge d(x, y)^2 J(x, dy) \leq \sum_y \frac{w(x, y)}{\mu(x)} \sigma(x, y)^2 \leq 1.$$

Thus (X, d, μ) and $J(x, dy)$ fits the conditions required in Theorem 1.3 except the fact that every closed ball is compact.

Corollary 4.3. *Let (X, w, μ) be a weighted graph satisfying the hypothesis stated at the beginning of this section. Define an adapted metric d on X according to Definition 4.1. Denote a closed ball with center $x \in X$ and radius $r > 0$ in the adapted metric by $B_d(x, r)$. If for some fixed point $x_0 \in X$ there exist a constant $b > 0$ such that*

$$\mu(B_d(x_0, r)) \leq \exp(br), \tag{4.48}$$

for all r large enough, then the corresponding heat semigroup P_t is stochastically complete.

Proof. The only thing remains to show is that $B_d(x, r)$ is compact for every $r > 0$ and $x \in X$. Recall that $\mu(x) > C > 0$ for any $x \in X$, we have that

$$|B_d(x, r)| \leq \frac{\mu(B_d(x_0, r + d(x, x_0)))}{C} < \infty.$$

□

In the physical Laplacian case, the weighted degree $\deg(x)$ coincides with the usual degree as the number of neighboring vertices of x. The function $\deg(x)$ makes connection between the graph metric ρ and the adapted metric d. Then Corollary 4.3 can be applied to give volume growth criteria for stochastic completeness with respect to the graph metric ρ. We can now prove Theorem 1.4 based on the ideas discussed in the introduction.

Proof of Theorem 1.4. For any non-negative integer r set

$$S_\rho(r) = \{x \in X : \rho(x, x_0) = r\}.$$

Observe that

$$V(x_0, n) = \sum_{r=0}^{n} \mu(S_\rho(r)).$$

Put $\varepsilon = \frac{1}{5}$ and $\alpha = 200c$ where c is the constant in (1.10). It follows from (1.10) that, for any $n \geq 1$,

$$\left|\{r \in [n-1, 2n+1] : \mu(S_\rho(r)) > \alpha n^2\}\right| \leq \frac{c(2n+1)^3}{\alpha n^2} \leq \varepsilon n.$$

It follows that

$$|\{r \in [n+1, 2n] : \max_{i=-2,-1,0,1} \mu(S_\rho(r+i)) > \alpha n^2\}| \leq 4\varepsilon n$$

and, hence,

$$|\{r \in [n+1, 2n] : \max_{i=-2,-1,0,1} \mu(S_\rho(r+i)) \leq \alpha n^2\}| \geq (1-4\varepsilon)n. \tag{4.49}$$

For any point $x \in S_\rho(r)$ we have

$$\deg x \leq \mu(S_\rho(r-1)) + \mu(S_\rho(r)) + \mu(S_\rho(r+1)). \tag{4.50}$$

So it follows from (4.49) that

$$|\{r \in [n+1, 2n] : \max_{x \in S_\rho(r-1) \cup S_\rho(r)} \deg x \leq 3\alpha n^2\}| \geq (1-4\varepsilon)n \tag{4.51}$$

(see Fig. 5).

It follows that, for r as in (4.51), any pair of $x \sim y$ with $x \in S_\rho(r-1)$, $y \in S_\rho(r)$ necessarily satisfies

$$\sigma(x, y) \geq \frac{1}{\sqrt{3\alpha n}}. \tag{4.52}$$

For any chain connecting a vertex $x \in S_\rho(n)$ with a vertex $y \in S_\rho(2n)$ and for any $r \in [n+1, 2n]$ there is an edge $x_r \sim y_r$ from this chain such $x_r \in S_\rho(r-1)$ and $y_r \in S_\rho(r)$ (see Fig. 6).

The length L of this chain is bounded below by $\sum_{r=n+1}^{2n} \sigma(x_r, y_r)$. Restricting the summation to those r that satisfy (4.51) and noticing that for any such r, $\sigma(x_r, y_r) \geq \frac{1}{\sqrt{3\alpha n}}$, we obtain

$$L \geq \frac{1}{\sqrt{3\alpha n}}(1-4\varepsilon)n = \frac{1-4\varepsilon}{\sqrt{3\alpha}} =: \delta.$$

Now we can estimate $d(x_0, x)$ for any vertex $x \notin B_\rho(x_0, R)$, where $R > 4$. Choose a positive integer k so that

$$2^k \leq R < 2^{k+1}.$$

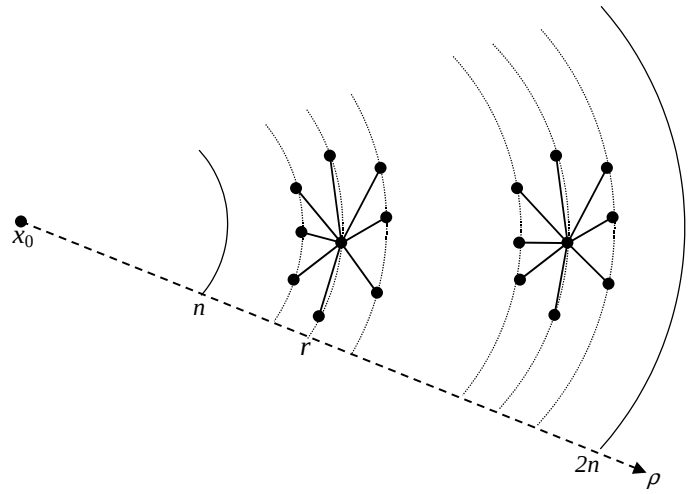

FIGURE 5. Between $n+1$ and $2n$ there are enough values of r such that $\deg(x) \leq 3\alpha n^2$ for all $x \in S_\rho(r-1) \cup S_\rho(r)$.

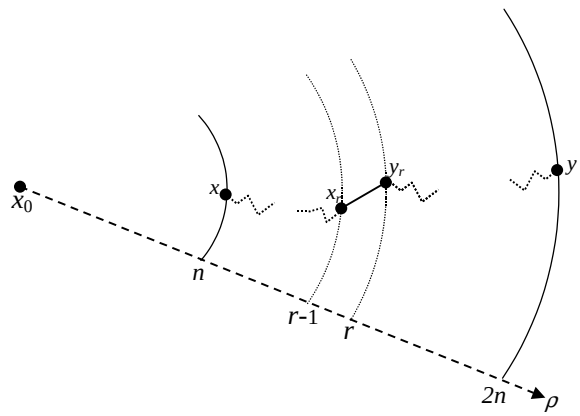

FIGURE 6. An edge $x_r \sim y_r$ of a chain between x and y

Any chain connecting x_0 and x contains a subsequence $\{x_i\}_{i=1}^k$ of vertices such that $x_i \in S_\rho(x_0, 2^i)$. By the previous argument, the length of the chain between x_{i-1} and x_i is bounded below by a constant δ, for any $i = 0, 1, ..., k-1$. It follows that the length of the whole chain is bounded below by δk, whence

$$d(x_0, x) \geq \delta k \geq \delta(\log_2 R - 1).$$

Setting $r = \delta(\log_2 R - 1)$ we obtain

$$B_d(x_0, r) \subset B_\rho(x_0, R).$$

whence

$$\mu(B_d(x_0, r)) \leq \mu(B_\rho(x_0, R)) \leq cR^3 \leq C\exp(br),$$

for some constants C and b. Hence, the volume growth with respect to the adapted distance d is at most exponential, and we conclude by Theorem 4.3, that the heat

semigroup corresponding to the physical Laplacian of (X, E) is stochastically complete. □

Remark 4.4. Theorem 1.4 remains true for general weights (X, w, μ) on a graph (X, E) that satisfy the condition

$$w(x, y) \leq C\mu(x)\mu(y) \quad \text{for all } x, y \in X, \tag{4.53}$$

for some constant $C > 0$. Condition (4.53) can be viewed as the fact that the jump kernel $J(x, dy)$ has bounded density $\frac{w(x,y)}{\mu(x)\mu(y)}$. Note that in this case the control of weighted degree (4.50) remains valid in the sense that

$$\begin{aligned} \deg x &= \frac{1}{\mu(x)} \sum_{y \in X} w(x, y) \\ &\leq C \frac{1}{\mu(x)} \sum_{y, y \sim x} \mu(x)\mu(y) \\ &\leq C \left[\mu(S_\rho(r-1)) + \mu(S_\rho(r)) + \mu(S_\rho(r+1))\right]. \end{aligned}$$

Other parts of the proof extend smoothly to this more general setting.

In the same way one obtains the following consequence of Theorem 1.3.

Proposition 4.5. *Assume that, for some reference point $x_0 \in X$, $\alpha \in [0, 1)$, $c_0, c_1, N > 0$, one of the following two couples of conditions is satisfied for all large enough r:*

(a) $\deg(x) \leq c_0^2 r^{2\alpha}$ *for* $x \in S_\rho(r)$ *and* $V_\rho(x_0, r) \leq \exp(c_1 r^{1-\alpha})$.
(b) $\deg(x) \leq c_0^2 r^2$ *for* $x \in S_\rho(r)$ *and* $V_\rho(x_0, r) \leq c_1 r^N$.

Then the graph (X, E) is stochastically complete.

Proof. We only sketch the proof that (a) implies stochastic completeness (the proof of (b) is similar). Indeed, for all $x \in S_\rho(r)$ and $y \in S_\rho(r-1)$ with $x \sim y$ we obtain

$$\sigma(x, y) \geq \frac{c_0}{r^\alpha}$$

and, similar to the proof of Theorem (1.4),

$$d(x, x_0) \geq c_0 \sum_{i=1}^{r} \frac{1}{i^\alpha} \geq c_0' r^{1-\alpha}.$$

for $x \in V \setminus B_\rho(x_0, r)$. Therefore, the condition $V_\rho(x_0, r) \leq \exp(c_1 r^{1-\alpha})$ implies $V_d(x_0, R) \leq \exp(c_2 R)$ for all R large enough whence the stochastic completeness follows. □

Remark 4.6. In the first couple of conditions of Proposition 4.5, if $0 \leq \alpha \leq \frac{1}{2}$, the stochastic completeness for the physical Laplacian on graphs is known without restrictions on volume growth. This is a direct consequence of Theorem 4.2 in [35], see also Theorem 5.4 in [21].

5. Further examples and applications

There are lots of natural metric measure spaces (X, d, μ) that satisfy the volume growth condition (1.7). Recall that we always assume that (X, d) is locally compact with infinite diameter and μ is a Radon measure with full support. On such spaces, it suffices to check the hypothesis (1.5) for the stochastic completeness of the heat semigroup P_t corresponding to a jump kernel $J(x, dy)$. In this section, for simplicity, we only consider the jump kernels that have densities with respect to the measure $d\mu(y)$. As before, we denote the density of $J(x, dy)$ by $J(x, y)$ which is symmetric and vanishes on the diagonal.

As was already mentioned above, the Euclidean spaces with Lebesgue measure satisfy (1.7) and the Lévy measures are adapted to the Euclidean distance. Masamune and Uemura [26] extensively discussed stochastic completeness of stable like jump process on manifolds that have polynomial volume growth and give some examples. Here we present more examples in the setting of metric measure spaces, motivated by classical Lévy measures.

Example 5.1. Let the metric measure space (X, d, μ) be α-regular, that is, $V(x, r) \simeq r^{\alpha}$. For any real parameter β, define the jump kernel $J(x, dy)$ by its density

$$J(x, y) = \frac{1}{d(x, y)^{\alpha+\beta}}. \tag{5.54}$$

It is easy to verify that the jump kernel $J(x, dy)$ satisfies (1.5) if and only if $0 < \beta < 2$.

Proof. Indeed, splitting the integral (1.5) into the sum of similar integrals over $B(x, 1)$ and $B(x, 1)^c$, we obtain

$$\begin{aligned}
\int_{B(x,1)} d^2(x, y) \frac{1}{d(x, y)^{\alpha+\beta}} d\mu(y) &= \sum_{k=0}^{\infty} \int_{B\left(x,2^{-k}\right)\setminus B\left(x,2^{-(k+1)}\right)} \frac{1}{d(x, y)^{\alpha+\beta-2}} d\mu(y) \\
&\leq \sum_{k=0}^{\infty} \left(2^{k+1}\right)^{\alpha+\beta-2} \mu\left(B\left(x, 2^{-k}\right)\right) \\
&\simeq \sum_{k=0}^{\infty} \left(2^{k}\right)^{\beta-2},
\end{aligned}$$

and

$$\begin{aligned}
\int_{B(x,1)^c} \frac{1}{d(x, y)^{\alpha+\beta}} d\mu(y) &= \sum_{k=0}^{\infty} \int_{B\left(x,2^{k+1}\right)\setminus B\left(x,2^{k}\right)} \frac{1}{d(x, y)^{\alpha+\beta}} d\mu(y) \\
&\leq \sum_{k=0}^{\infty} \left(2^{-k}\right)^{\alpha+\beta} \mu\left(B\left(x, 2^{k+1}\right)\right) \\
&\simeq \sum_{k=0}^{\infty} \left(2^{-k}\right)^{\beta},
\end{aligned}$$

whence the claim follows. Hence, under the assumption $0 < \beta < 2$ Theorem 1.3 yields the stochastic completeness. In this case the above estimates yield

$$\int_X \left(1 \wedge d(x,y)^2\right) J(x,y)\, d\mu(y) \leq \text{const}\left(\frac{1}{2-\beta} + \frac{1}{\beta}\right), \tag{5.55}$$

where const is uniformly bounded for all values of $\beta \in (0,2)$. □

There are examples of fractals spaces where the jump kernel density as in (5.54) with $\beta > 2$ defines a regular Dirichlet form (see [6]). In this case the distance function is not adapted and we cannot use Theorem 1.3 to claim stochastic completeness. A major difficulty in this setting is that Lipschitz functions are no longer in the domain of the Dirichlet form and none of the existing methods works. The stochastic completeness in the case $\beta > 2$ remains open.

Example 5.2. Let the metric measure space (X, d, μ) be α-regular. Consider now a more general jump kernel given by

$$J(x,y) = \int_0^2 \frac{\varphi(\beta, x, y)\, d\beta}{d(x,y)^{\alpha+\beta}}, \tag{5.56}$$

where $\varphi(\beta, x, y)$ is a non-negative measurable function of β, x, y that is symmetric in x, y. Assuming in addition that

$$\int_0^2 \frac{\sup_{x,y} \varphi(\beta, x, y)}{\beta(2-\beta)} d\beta \leq \text{const}$$

and using (5.55), we obtain that the jump kernel with density (5.56) satisfies (1.5). Hence, the corresponding Dirichlet form is stochastically complete.

Remark 5.3. Chen and Kumagai [7] proved by a different method the stochastic completeness for the jump kernel $J(x, dy)$ as in (5.56) assuming that $\varphi(\beta, x, y)$ is uniformly bounded and identically vanishes for $\beta < \varepsilon$ and $\beta > 2 - \varepsilon$ for some $\varepsilon > 0$.

Example 5.4. Let the metric measure space (X, d, μ) be α-regular. Consider jump kernels given by

$$\begin{aligned} J(x,y) &\simeq \frac{1}{d(x,y)^{\alpha}} \mathbf{1}_{\{d(x,y)<1\}} + \frac{1}{d(x,y)^{\alpha+\beta}} \mathbf{1}_{\{d(x,y)\geq 1\}}, \\ J'(x,y) &\simeq \frac{1}{d(x,y)^{\alpha}} \mathbf{1}_{\{d(x,y)<1\}} + \frac{e^{-c_0 d(x,y)}}{d(x,y)^{\beta}} \mathbf{1}_{\{d(x,y)\geq 1\}}. \end{aligned}$$

where c_0 and β are positive constants. An easy calculation similar to the one in Example 5.1 can show that (1.5) holds for $J(x, dy)$ and $J'(x, dy)$.

Example 5.5. Let the metric space (X, d) be α-regular. Consider jump kernels given by

$$J(x,y) \simeq \frac{1}{d(x,y)^{\alpha+2}\left(\log \frac{2}{d(x,y)}\right)^{1+\beta}} \mathbf{1}_{\{d(x,y)<1\}}$$

for $\beta > 0$. Similar to the calculation in Example 5.1, using dyadic decomposition, we can see that (1.5) is fulfilled.

Remark 5.6. Example 5.4 and Example 5.5 are motivated by recent interests on subordinate Brownian motions beyond the range of α-stable processes. Example 5.4 is taken from the estimates of jump kernels of geometric stable processes in [32]. A subordinate Brownian motion whose jump kernel has the behavior at short distance as in Example 5.5 is studied by Mimica [28].

A major advantage of our Theorem 1.3 is that it allows to consider jump processes on manifolds with bounded geometry, such as hyperbolic spaces. More generally, we have the following example.

Example 5.7. Let (X, d, μ) be a metric measure space that satisfies:

$$V(x,r) \le \begin{cases} c_1 e^{\kappa r}, & r \ge 1, \\ c_2 r^{\alpha}, & 0 < r \le 1, \end{cases}$$

where c_1, c_2, α and κ are positive constants independent of x and r. Consider a jump kernel $J(x, dy) = J(x, y)d\mu(y)$ with $J(x, y)$ satisfying:

$$J(x,y) \le \begin{cases} C_1 \dfrac{e^{-\lambda d(x,y)}}{d(x,y)^{\beta_1}}, & d(x,y) \ge 1, \\ \dfrac{C_2}{d(x,y)^{\beta_2}}, & 0 < d(x,y) < 1, \end{cases}$$

for some positive constants C_1, C_2.

Let us show that the jump kernel $J(x, dy)$ is adapted to d if $\beta_1 > 1$, $0 < \beta_2 < \alpha + 2$. Splitting the integral (1.5) into the sum of similar integrals over $B(x, 1)$ and $B(x, 1)^c$, we obtain

$$\begin{aligned} \int_{B(x,1)} d(x,y)^2 J(x,y) d\mu(y) &\le \sum_{k=0}^{\infty} \int_{B\left(x,2^{-k}\right)\setminus B\left(x,2^{-(k+1)}\right)} \frac{C_2 d(x,y)^2}{d(x,y)^{\beta_2}} d\mu(y) \\ &\le 4C_2 \sum_{k=0}^{\infty} \left(2^{k+1}\right)^{\beta_2-2} \mu\left(B\left(x,2^{-k}\right)\right) \\ &\le C_2' \sum_{k=0}^{\infty} \left(2^k\right)^{\beta_2-\alpha-2}, \end{aligned}$$

and

$$\begin{aligned} \int_{B(x,1)^c} J(x,y) d\mu(y) &\le \sum_{k=1}^{\infty} \int_{B(x,k+1)\setminus B(x,k)} C_1 \frac{e^{-\kappa d(x,y)}}{d(x,y)^{\beta_1}} d\mu(y) \\ &\le \sum_{k=1}^{\infty} C_1 \frac{e^{-\kappa k}}{k^{\beta_1}} \mu\left(B(x,k+1)\right) \\ &\le C_1' \sum_{k=1}^{\infty} \frac{e^{-\kappa k} e^{\kappa(k+1)}}{k^{\beta_1}}, \end{aligned}$$

whence the claim follows.

Now we briefly explain the motivation of Example 5.7. The heat kernel $p_s(x, y)$ corresponding to the (positive definite) Laplacian Δ on $\mathbb{H}^3$ is (see for example, [18]

page 115)

$$p_s(x,y) = \frac{1}{(4\pi s)^{3/2}} \frac{r}{\sinh r} \exp\left(-\frac{r^2}{4s} - s\right).$$

Then the heat kernel for $\Delta^{\frac{1}{2}}$ is

$$q_t(x,y) = \int_0^\infty p_s(x,y)\eta_t(s)ds$$

where

$$\eta_t(s) = \frac{t}{2\sqrt{\pi}} s^{-3/2} \exp(-\frac{t^2}{4s})$$

is the subordinator [4, 29]. We want to calculate the jump kernel $j_0(x,y)d\mu(y)$ corresponding to $\Delta^{\frac{1}{2}}$. Recall an integral representation for Macdonald functions ([14, page 917, 8.432.6]):

$$K_\nu(z) = \frac{1}{2}\left(\frac{z}{2}\right)^\nu \int_0^\infty t^{-\nu-1} e^{-t-\frac{z^2}{4t}} dt.$$

Direct integration can then show that

$$q_t(x,y) = C_0 \frac{rt}{r^2+t^2} \frac{K_2(\sqrt{r^2+t^2})}{\sinh r}$$

for a constant C_0. The limit

$$\lim_{t\to 0} \frac{p_t(x,y)}{t} = C_0 \frac{K_2(r)}{r \sinh r}$$

exists and hence the density of the corresponding jump kernel is ([5])

$$j_0(x,y) = \lim_{t\to 0} \frac{p_t(x,y)}{t} = C_0 \frac{K_2(r)}{r\sinh r}.$$

A jump kernel $j(x,y)d\mu(y)$ with $j(x,y) \simeq j_0(x,y)$ is then a natural candidate for stable like jump kernel on the hyperbolic space $\mathbb{H}^3$. Fix $x \in \mathbb{H}^3$, recall that the area function $S(r) = 4\pi(\sinh r)^2$ of $\mathbb{H}^3$ in the polar coordinates centered at x. Recall also the following asymptotic of $K_2(r)$ and $\sinh r$[2]:

$$\begin{array}{lll} K_2(r) \sim \sqrt{\frac{\pi}{2r}} \exp(-r), & \sinh r \sim \frac{1}{2}\exp r & \text{as } r \to +\infty \\ K_2(r) \sim \frac{2}{r^2}, & \sinh r \sim r & \text{as } r \to 0+ \end{array}$$

where $\sim$ means "asymptotically equivalent". It follows that the hypothesis of Example 5.7 are satisfied with

$$\kappa = 2, \alpha = 3, \beta_1 = \frac{3}{2}, \beta_2 = 3.$$

Hence, Example 5.7 and Theorem 1.3 gives the stochastic completeness of the corresponding heat semigroup.

More general calculations of heat kernels of stable like processes on symmetric spaces via subordination are done by Graczyk and Stos [13]. For the general theory of Lévy process on Lie groups and symmetric spaces, we refer to the survey of Applebaum [1] and the references there.

Acknowledgement. X.H. would like to thank R. Wojciechowski, M. Keller, and D. Lenz for inspiring discussions and valuable suggestions. He would also like to thank A. Mimica, who patiently explained the theory of subordination to him.

References

1. D. Applebaum, *Lévy processes in stochastic differential geometry*, Lévy Processes: Theory and Applications, Birkhäuser Boston, 2001, pp. 111–137.
2. G. B. Arfken and H. J. Weber, *Mathematical methods for physicists*, 6th ed., Harcourt: San Diego, 2005.
3. R. Azencott, *Behavior of diffusion semi-groups at infinity*, Bull. Soc. Math. (France) **102** (1974), 193–240.
4. J. Bertoin, *Lévy processes*, Cambridge Univ. Press, 1996.
5. E.A. Carlen, S. Kusuoka, and D.W. Stroock, *Upper bounds for symmetric Markov transition functions*, Ann. Inst. H. Poincaré-Probab. Statist. **23** (1987), 245–287.
6. Z.Q. Chen and T. Kumagai, *Heat kernel estimates for stable-like processes on d-sets*, Stochastic Process. Appl. **108** (2003), 27–62.
7. ———, *Heat kernel estimates for jump processes of mixed types on metric measure spaces*, Probab. Theory Relat. Fields **140** (2008), 277–317.
8. E.B. Davies, *Heat kernel bounds, conservation of probability and the Feller property*, J. D' Analyse Math. **58** (1992), 99–119.
9. J. Dodziuk, *Elliptic operators on infnite graphs*, Analysis, geometry and topology of elliptic operators, World Sci. Publ., Hackensack, NJ,, 2006.
10. M. Folz, *Gaussian upper bounds for heat kernels of continuous time simple random walks*, in preparation.
11. R. Frank, D. Lenz, and D. Wingert, *Intrinsic metrics for (non-local) symmetric Dirichlet forms and applications to spectral theory*, in preparation.
12. M. Fukushima, Y. Oshima Y., and M. Takeda, *Dirichlet forms and symmetric Markov processes*, Walter de Gruyter, Berlin, 1994.
13. P. Graczyk and A. Stós, *Transition density estimates for stable processes on symmetric spaces*, Pacific J. Math. **217** (2004), no. 1, 87–100.
14. I. S. Gradshteyn and I. M. Ryzhik, *Table of integrals, series and products*, 7th ed., Elsevier Academic Press, 2007.
15. A. Grigor'yan, *Bounded solutions of the schrödinger equation on non-compact Riemannian manifolds*, Trudy seminara I.G.Petrovskogo, no. 14, 66–77, Engl. transl.: J. Soviet Math., 51 (1990) no.3, 2340-2349.
16. ———, *On stochastically complete manifolds*, DAN SSSR **290** (1986), 534–537, in Russian. Engl. transl.: Soviet Math. Dokl., 34 (1987) no.2, 310-313.
17. ———, *Analytic and geometric background of recurrence and non-explosion of the Brownian motion on Riemannian manifolds*, Bull. Amer. Math. Soc. **36** (1999), 135–249.
18. ———, *Heat kernels on weighted manifolds and applications*, Cont. Math. **398** (2006), 93–191.
19. ———, *Heat kernel and analysis on manifolds*, vol. **47**, AMS-IP Studies in Advanced Mathematics, 2009.
20. Elton P. Hsu, *Heat semigroup on a complete Riemannian manifold*, Ann. Probab. **17** (1989), 1248–1254.
21. X. Huang, *Stochastic incompleteness for graphs and weak Omori-Yau maximum principle*, (2010), preprint, arXiv:1009.2579v3 [math.SP].
22. L. Karp and P. Li, *The heat equation on complete Riemannian manifolds*, unpublished manuscript 1983.
23. M. Keller and D. Lenz, *Dirichlet forms and stochastic completeness of graphs and subgraphs*, (2009), preprint, arXiv:0904.2985v1 [math.FA].
24. M. Keller and R. K. Wojciechowski, *Volume growth, discreteness of the spectrum, and stochastic incompleteness of infinite graphs*, (2010), preprint.
25. P. Lax, *Functional analysis*, Wiley-Interscience, 2002.
26. J. Masamune and T. Uemura, *Conservation property of symmetric jump processes*, Ann. Inst. Henri. Poincaré Probab. Statist., to appear.
27. ———, *L^p-Liouville property for nonlocal operators*, (2008), preprint.
28. A. Mimica, *Heat kernel upper estimates for symmetric jump processes with small jumps of high intensity*, (2010), preprint.

29. K.-I. Sato, *Lévy processes and infinitely divisible distributions*, Cambridge Univ. Press, 1999.
30. K.T. Sturm, *Analysis on local Dirichlet spaces I. recurrence, conservativeness and L^p- Liouville properties*, J. Reine. Angew. Math. **456** (1994), 173–196.
31. T. Takeda, *On a martingale method for symmetric diffusion process and its applications*, Osaka J. Math **26** (1989), 605–623.
32. H. Šikić, R. Song, and Z. Vondraček, *Potential theory of geometric stable processes*, Probability Theory and Related Fields **135** (2006), 547–575.
33. A. Weber, *Analysis of the laplacian and the heat flow on a locally finite graph*, J. of Math. Anal. and App. **370** (2010), 146–158.
34. R. K. Wojciechowski, *Stochastic completeness of graphs*, 2007, Ph.D. Thesis, arXiv:0712.1570v2 [math.SP].
35. ———, *Stochastically incomplete manifolds and graphs*, (2009), preprint, arXiv:0910.5636v1 [math-ph].
36. S. T. Yau, *On the heat kernel of a complete Riemannian manifold*, J. Math. Pures Appl. **57** (1978), 191–201.

Department of Mathematics, University of Bielefeld, 33501 Bielefeld , Germany

Department of Mathematics, University of Bielefeld, 33501 Bielefeld , Germany

Department of Mathematics and Statistics, Pennsylvania State University, Altoona, PA 16601 USA